Product information

Swing Door Hinge

ZIMMER GROUP
Am Glockenloch 2
77866 Rheinau
T +49 7844 9110-0
info@daempfungssysteme.de
www.zimmer-softclose.shop
www.zimmer-group.com

General data:

Type of product:	Soft Close swing door hinge
Origin:	Rheinau, Baden-Württemberg, Germany
Lifetime:	500.000 cycles
Installation option:	Glass door

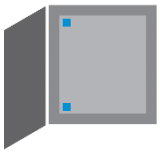

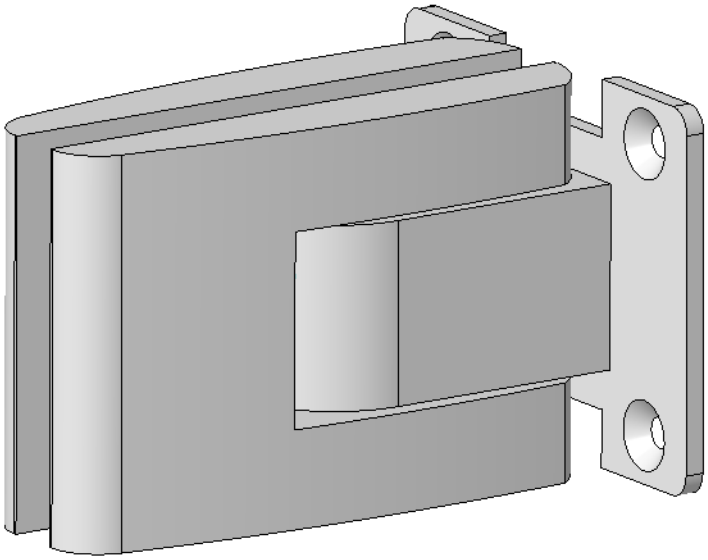

Index

1. Content

The new innovative damped swing door hinge is mounted as a connecting piece between a fixed part and a glass door or a wooden door.

The hinge opens inwards and outwards and is therefore also called a pendelum hinge.

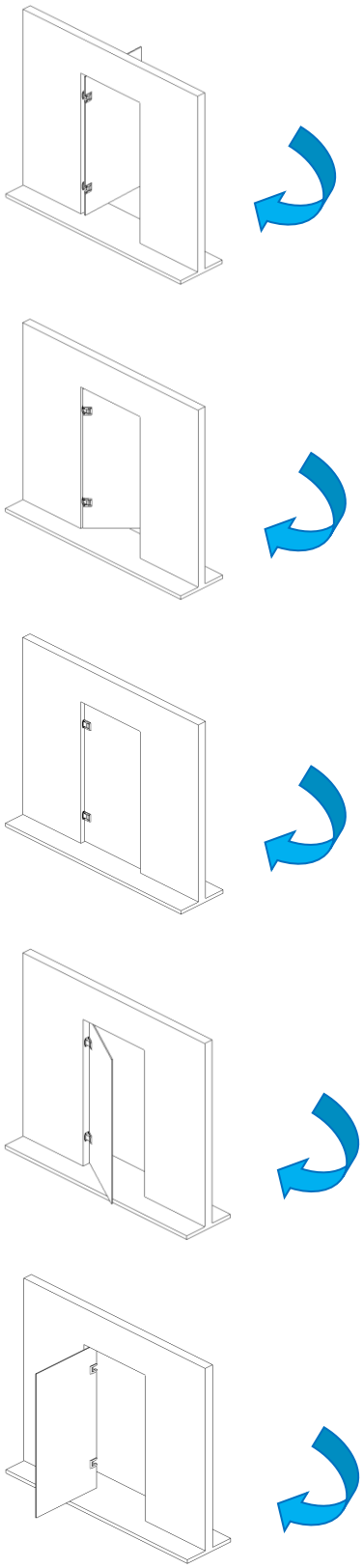

2. Function

Hinge at 0° (door closed)

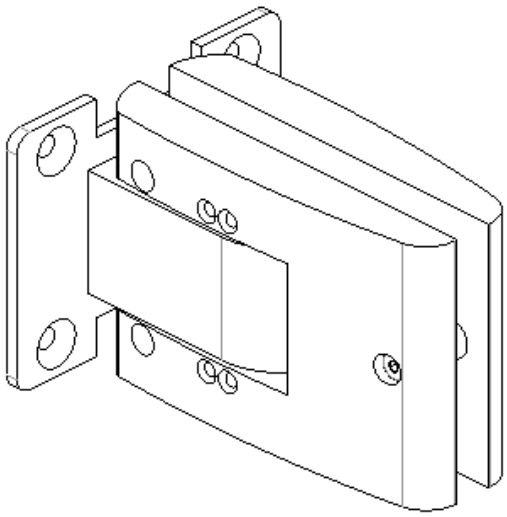

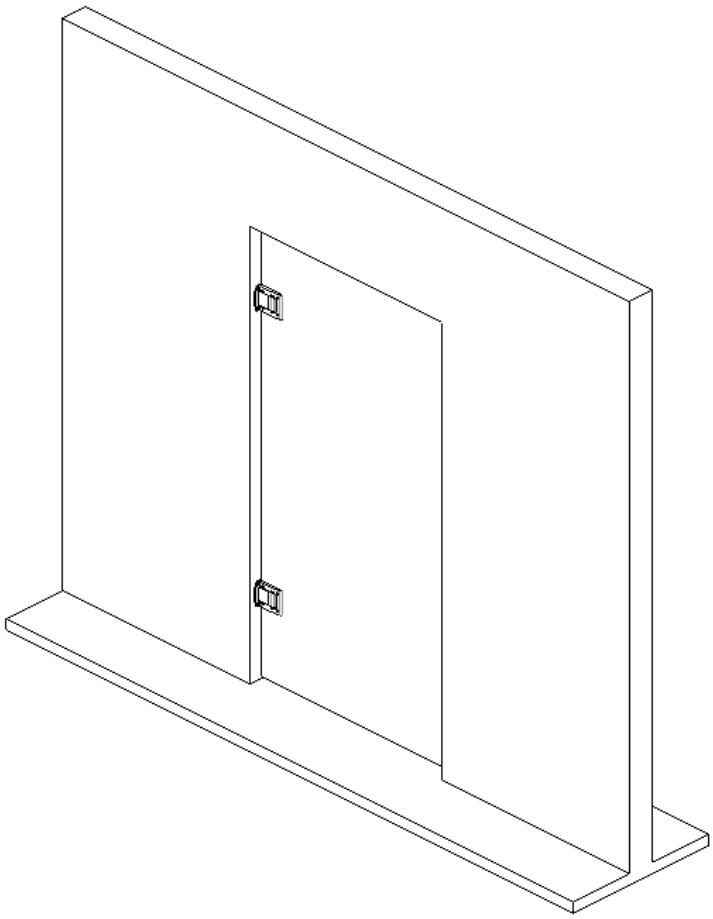

Hinge at 90° (door open)

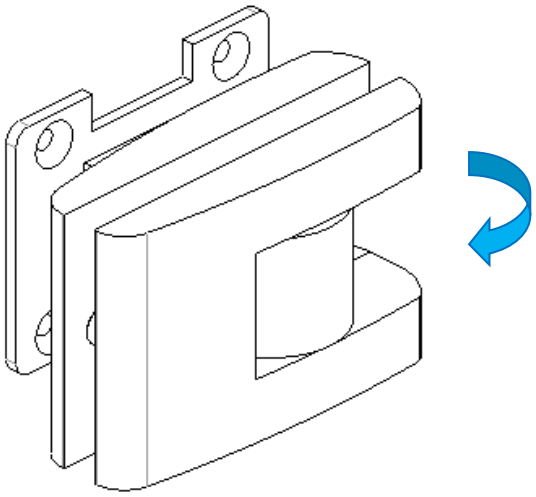

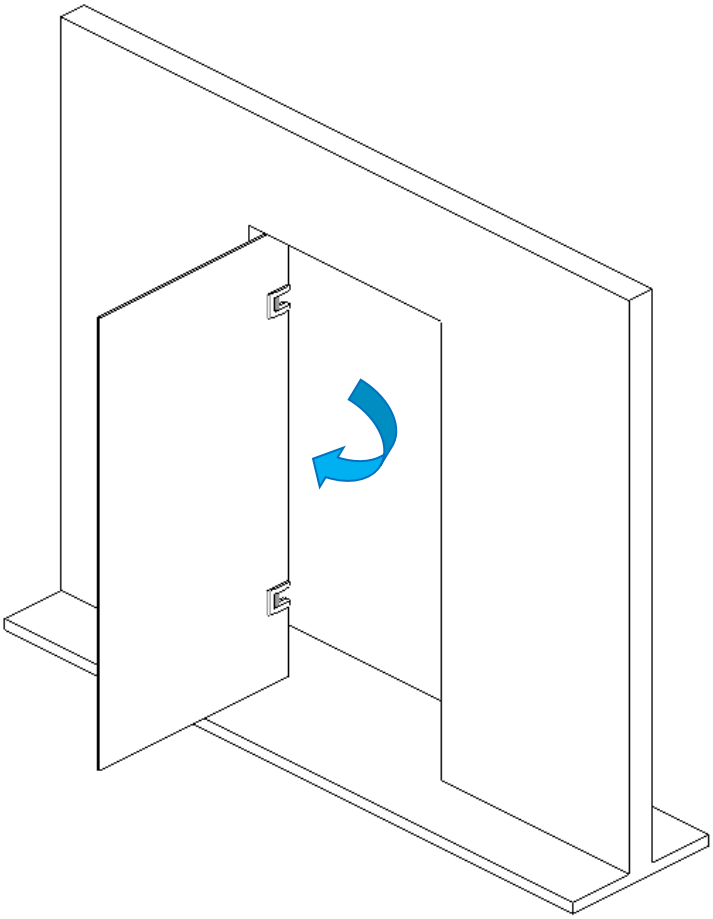

Glass connection

The door leaf is let into the space between the hingespace (Blue arrow) and then clamped with 3 screws (black arrows):

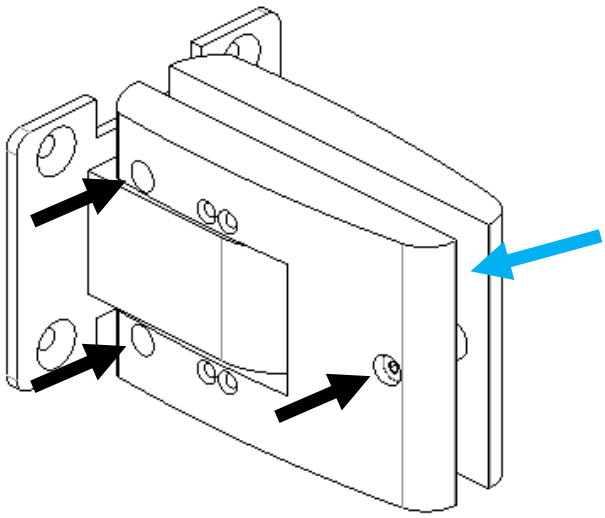

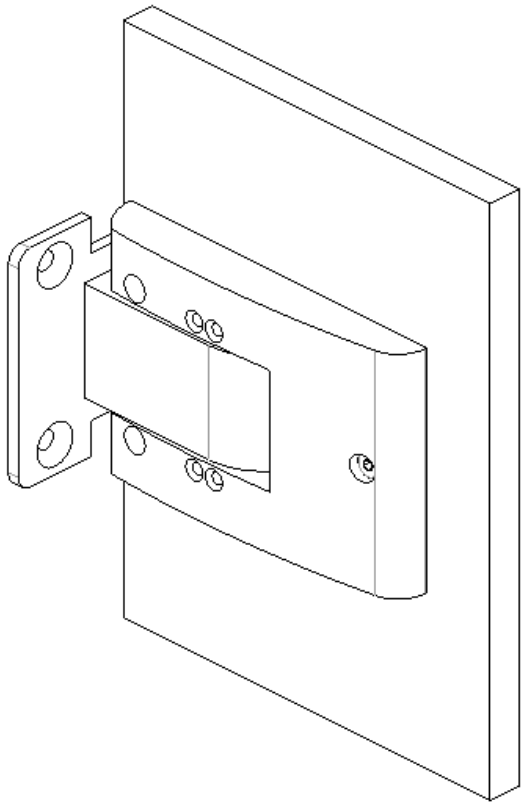

The door leaf is thus connected to the hinge.

Adjustable zero position:

The zero position means the position of the closed door. The adjustable zero Position can compensate for tolerances and backlash. The door can be adjusted up to 5° in both directions.

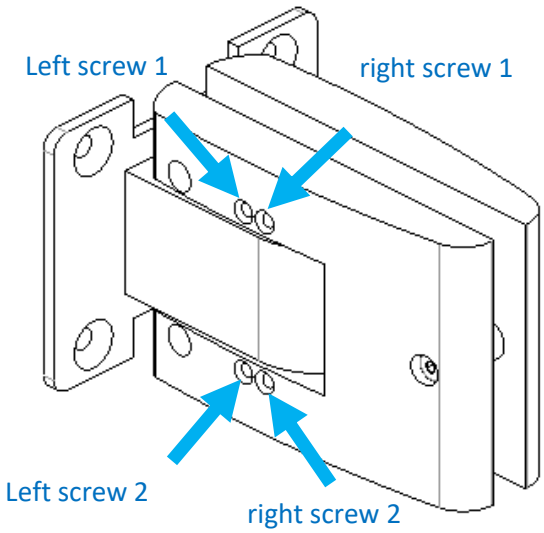

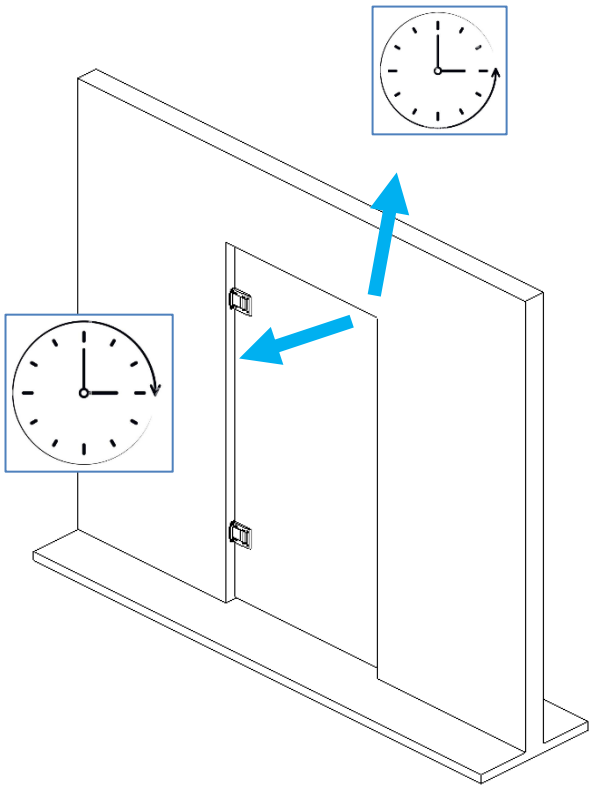

The hinge can be adjusted in the zero position with the 2 left screws and 2 right screws.

At the beginning all 4 screws are loosened. The zero position can then be set as desired.

Option 1:

Tightening the two screws on the left turns the hinge counter-clockwise and the door leaf as well.

Option 2:

Tightening the two screws on the right turns the hinge clockwise and so does the door leaf.

Finally, the other screws must be tightened so that the setting is fixed.

Explanation of the adjustable „0“ - position:

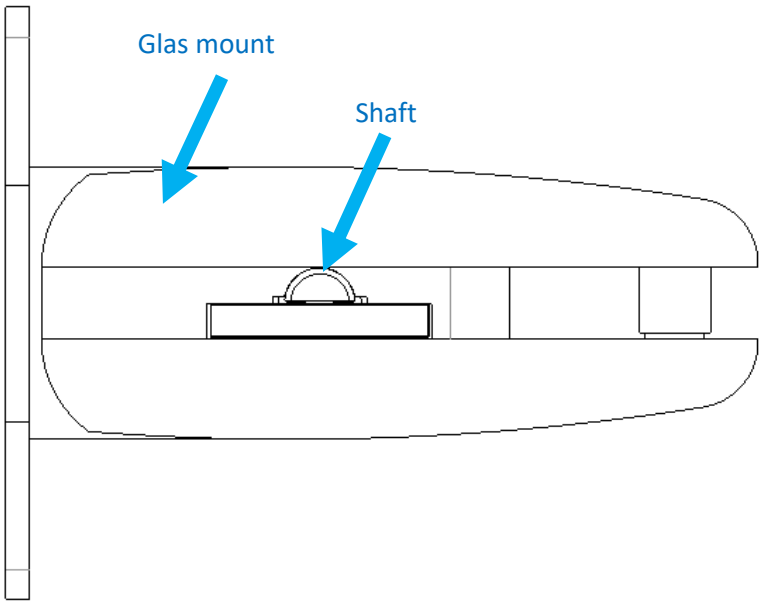

The shaft within the „bottom-receiver“ can be turned by tightening the left as well as the right screw:

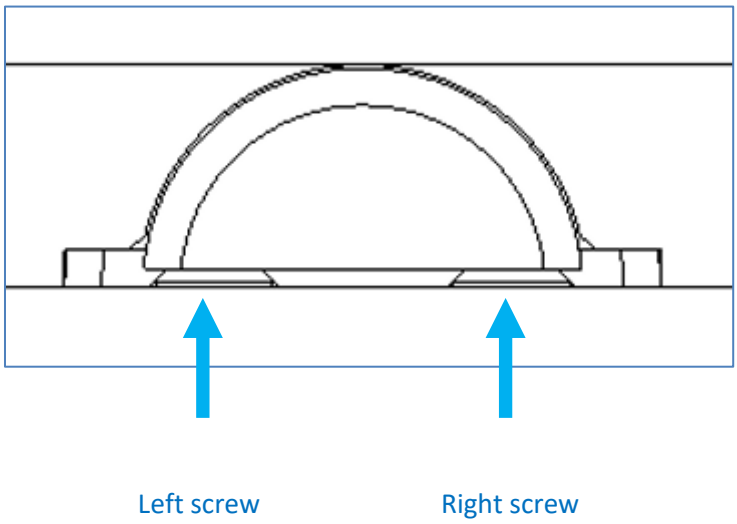

Tightening the left screw rotates the shaft:

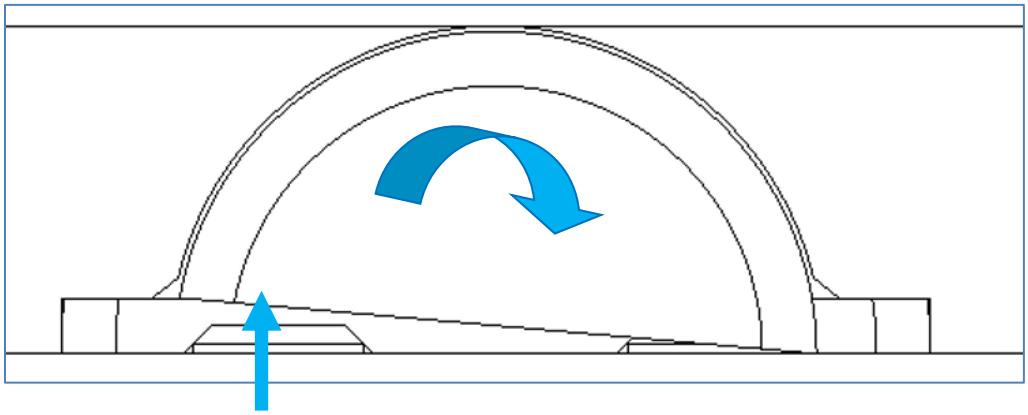

This causes the hinge to rotate counterclockwise and with it the door leaf:

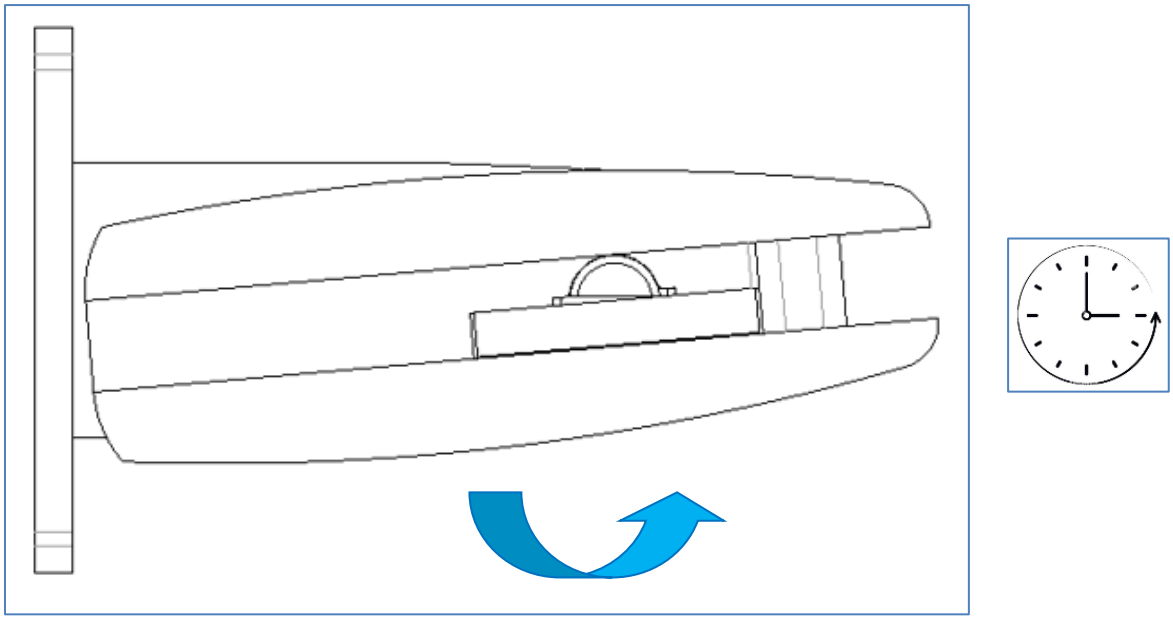

Tightening the right screw rotates the shaft:

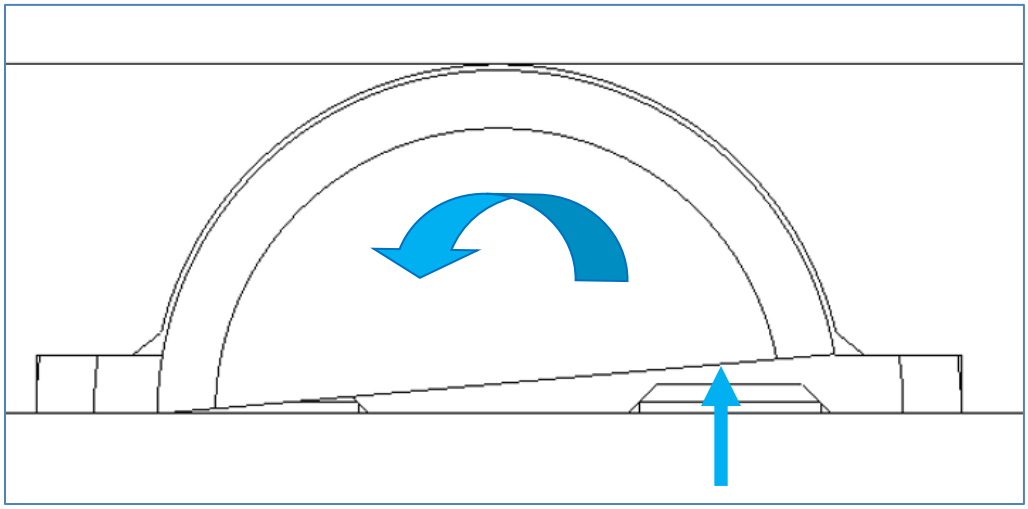

This causes the hinge to rotate clockwise and with it the door leaf:

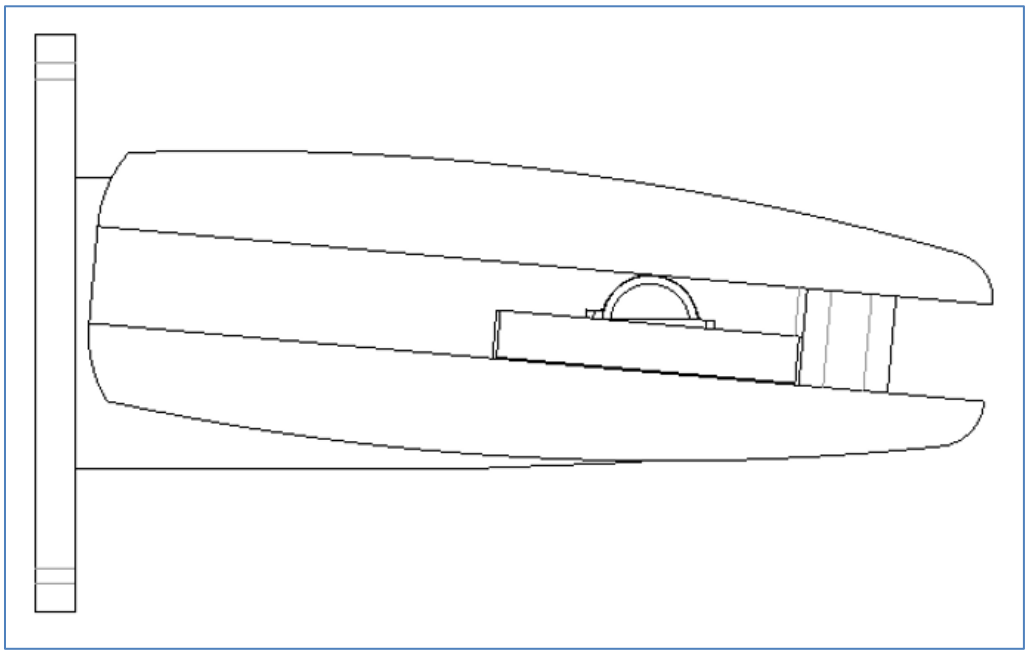

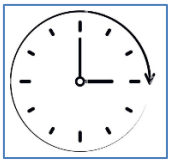

3. Technical data

Length [mm]:	127
Width [mm]:	46
Height [mm]:	82
Load capacity per hinge [kg]:	35
Lifetime [cycles]:	500.000
Operating conditions [°C]	10 to 40
Storage conditions [°C]	-20 to 80

4. Characteristics

- Damped swing door hinge for glass doors (glass-wall -and glass-glass connection avaiable) and wooden door leafs
- Opening by 90° on both sides
- Locking of opened door is possible
- Automatic closing from 70°
- Automatic centerin at 0°
- Zero position with spring preload
- Adjustable zero position +/- 10°
- Glass thickness of 8/10/12 mm
- Opened Door higher than 90° must be lined with a Stop.

5. Integration

Main application:

Sliding door	
Drawer	
Hinge	☑
Flap	

6. Technical drawing

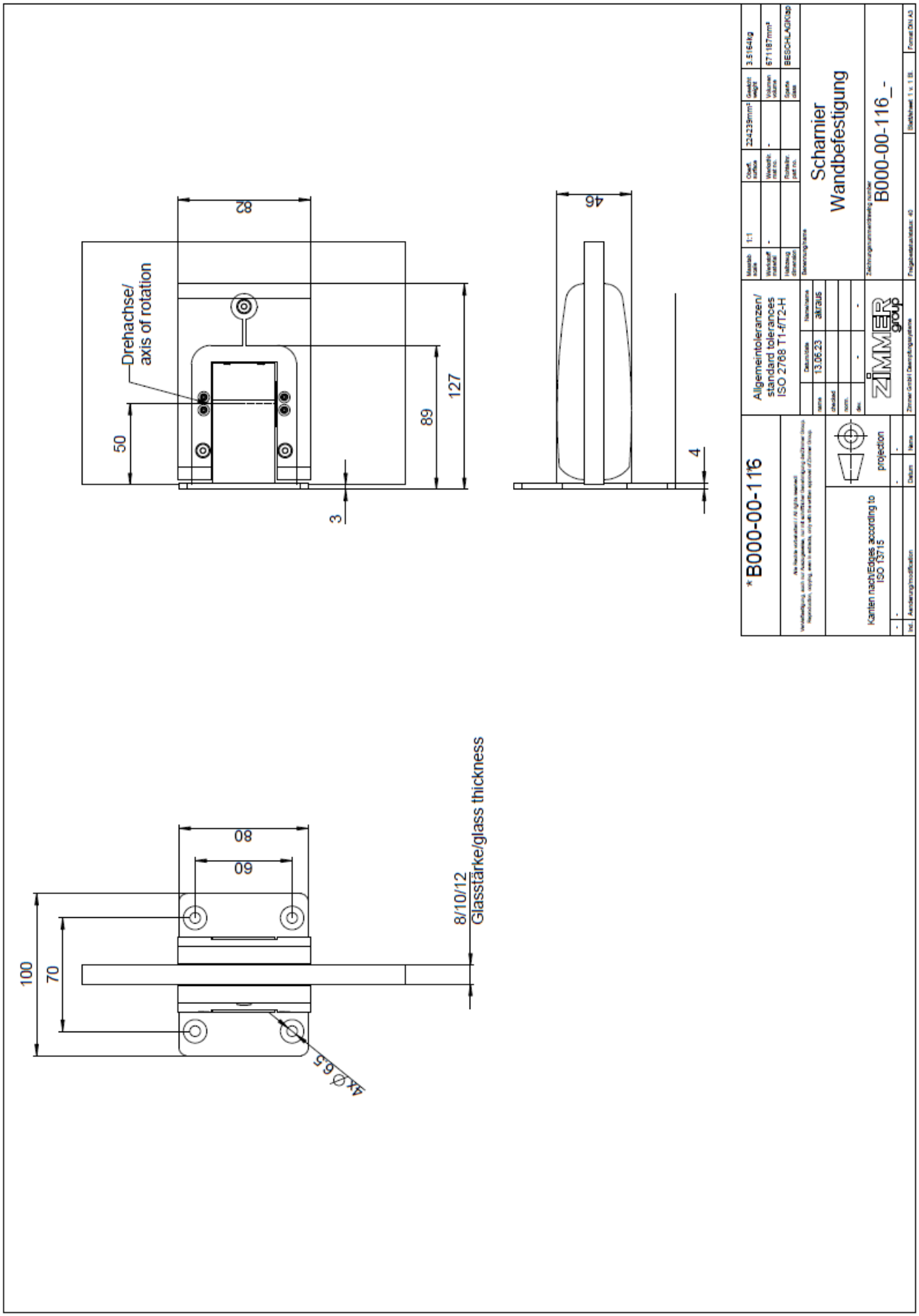

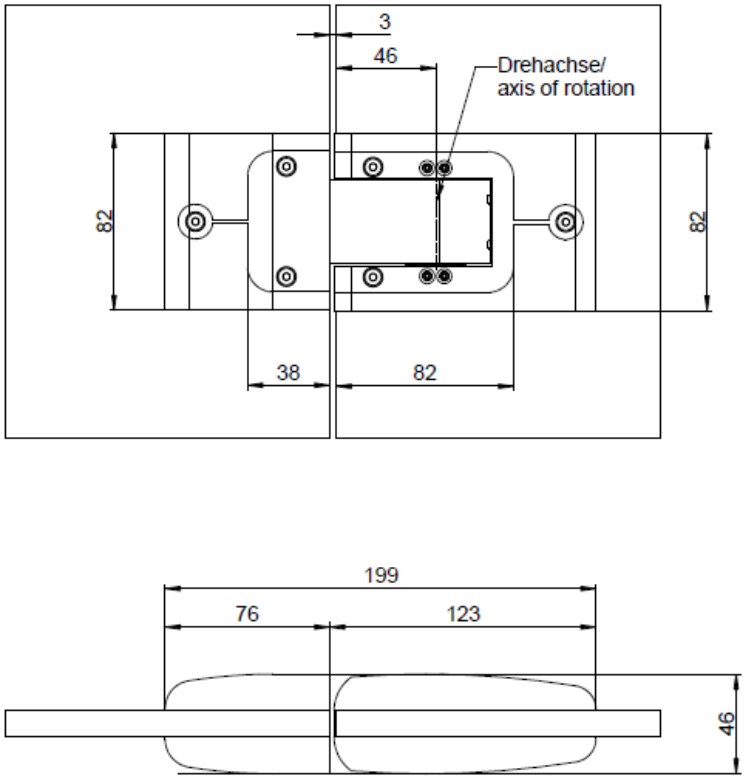

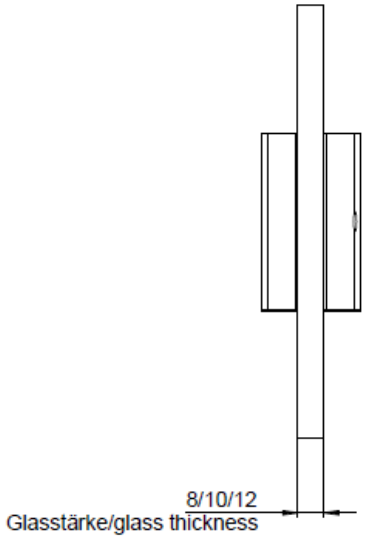

*B000-00-117	Allgemeintoleranzen/ standard tolerances ISO 2768 T1-f/T2-H	Maßstab scale	1:1	Oberf. surface	360194mm²	Gewicht weight	6.8488kg
		Werkstoff material	-	Werkstfr. mat no.	-	Volumen volume	1209963mm³
		Halbzeug dimension		Rohteilnr. part no.		Sperre class	BESCHLAGKlap
Alle Rechte vorbehalten / All rights reserved. Vervielfältigung, auch nur Auszugsweise, nur mit schriftlicher Genehmigung der Zimmer Group. Reproduction, copying, even in extracts, only with the written approval of Zimmer Group.	name: Datum/date 13.06.23, Name/name akraus; checked; norm.; dev. - -	Benennung/name: Scharnier Glas-an-Glas-Befestigung					
Kanten nach/Edges according to ISO 13715	projection	Zeichnungsnummer/drawing number: B000-00-117_-					
Ind. - - Änderung/modification; Datum -; Name -	Zimmer GmbH Dämpfungssysteme	Freigabestatus/status: 40	Blatt/sheet 1 v. 1 Bl.	Format DIN A3			

7. Test procedure

The hinge is tested on the basis of:

- DIN EN 1154:2003 (Door closing device with controlled closing process)
- DIN EN 1670:2007 (corrosion resistance)
- DIN 18263-1:1997 (Door closer with hydraulic damping, type K (Crank mechanism door closer)