Product information

Silento Industriale

ZIMMER GROUP
Am Glockenloch 2
77866 Rheinau
T +49 7844 9110-0
info@daempfungssysteme.de
www.zimmer-group.com
www.zimmer-softclose.shop

General data:

Type of product:	Self-closing unit with fluid damper
Origin:	Rheinau, Baden- Württemberg, Germany
Lifetime:	up to 250.000 cycles
Installation option:	Sliding door

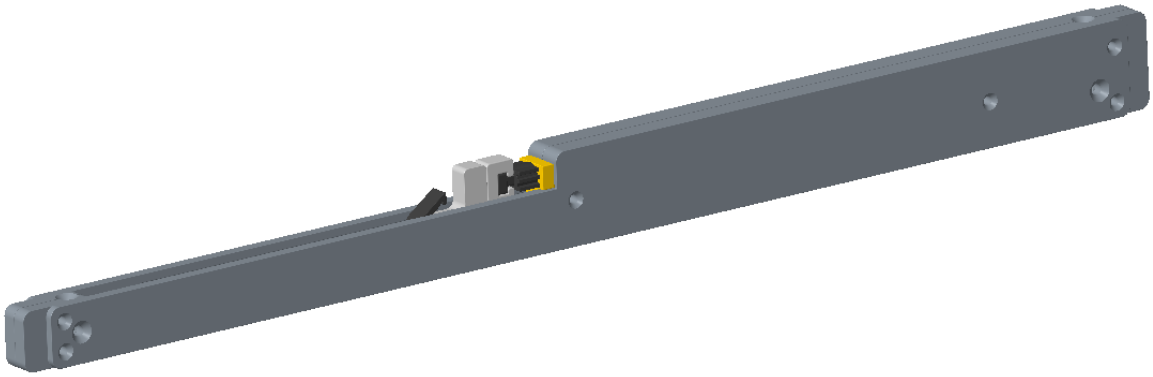

This soft close mechanism offers friction-free damping for various sliding doors up to 350kg. User-friendly connection options round off this product: invisibly integrated into a rail system, mounted in different installation positions (flat, upright, closing to the right or left) or attached to the carriage adaptively. Thanks to our specially developed stainless steel fluid damper and the individual metal components of the housing, this self-closing mechanism convinces with higher forces and a longer service life with the highest quality requirements. Due to the stable design, this system can also be used as an end stop.

Index

1. Content 3
2. Function 3
3. Technical data 3
4. Characteristics 4
5. Integration 4
6. Accessory 5
7. Technical drawing 6
8. Test procedure 7
9. Materials 7

1. Content

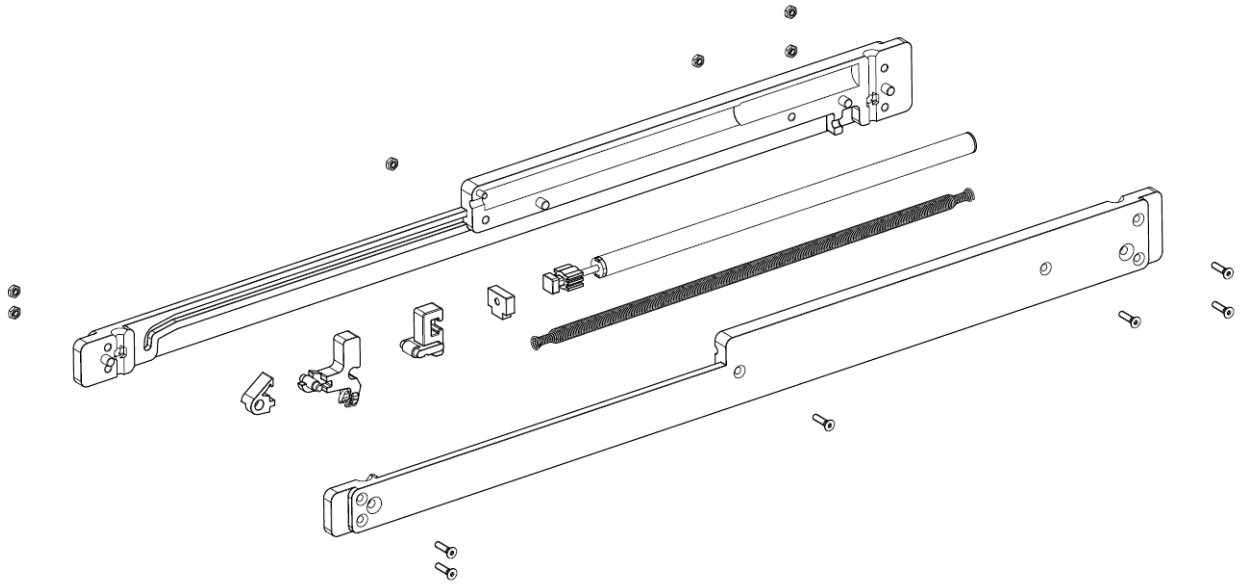

2. Function

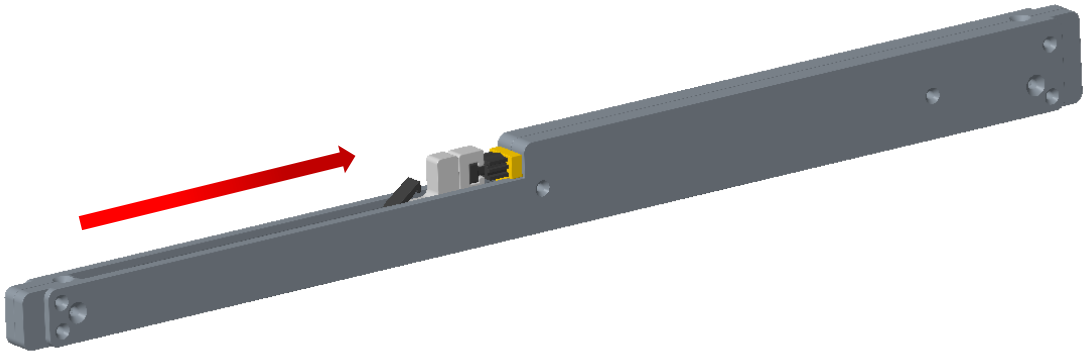

3. Technical data

Housing length [mm]:	up to 495
Housing width [mm]:	18
Housing height (total height) [mm]:	37
Distance fixing points [mm]:	32/ up to 448

Ø of fixing holes [mm]:	4,2 / M4
Stroke [mm]:	up to 140
Weight to be braked [kg]:	up to 350
Lifetime [cycles]:	up to 250.000
Release:	possible
Operating conditions [°C]	+10 to +40
Storage conditions [°C]	-20 to +80

4. Characteristics

Closed unit	
Effective direction outside closing	
Effective direction inside closing	☑
Fluid damper	☑
Air-friction damper	
Damping effect one-way	☑
Damping effect both-sided	
Different locking hooks possible	
Emergency function	☑

5. Integration

Main application:

Sliding door	☑
Drawer	
Hinge	
Flap	

Softclose unit:

Multiple orientation of the fixing possible	☑
Fixing hole with lowering	☑
Connection to running gear provided	☑
Mounting on running rail possible	☑
Retrofit	☑
Threaded nut possible for the fixation	☑

6. Accessory

Locking hook

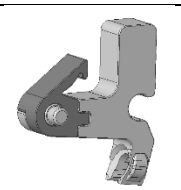	Standard locking hook

Connection

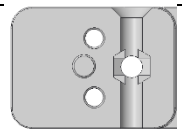	Without slot nut
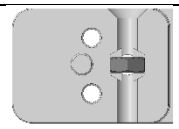	Vertical slot nut
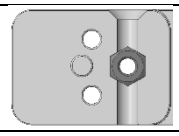	Horizontal slot nut

7. Technical drawing

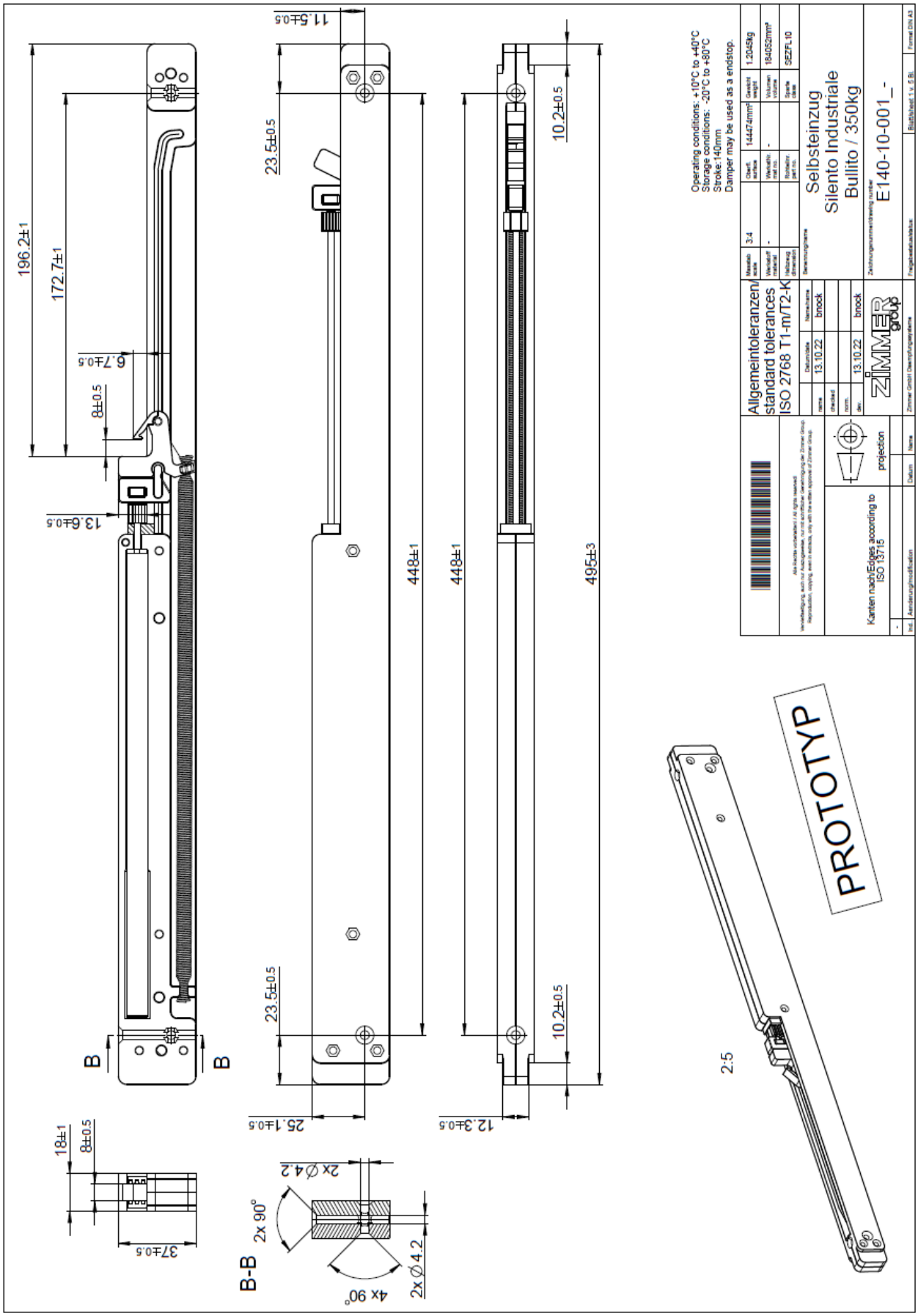

8. Test procedure

Test	Requirements according to Zimmer	Requirements Zimmer met
Long-term test	Up to 250.000 cycles	
Over stress test	10 x up to 1 m/s	
Storage test	-20°C till 80°C	
Climate test	10°C to 40°C	

9. Materials

Selfclosing unit:

Housing:	ZP0410 DIN EN 12844
Hook:	ZP0410 DIN EN 12844 / POM
Spring:	EN10270-1-DH